DESIGN AND CONSTRUCTION OF AN AUTOMATIC SLIDING DOOR USING INFRARED SENSOR

Oladunmoye M. & Oluwatomi A.A.
Department of Computer Science,
Lead City University, Ibadan.
kenbolaji@yahoo.com & oluwatomiadenike@gmail.com

Obakin O
Department of Civil Engineering,
University of Ibadan, Nigeria.
morenifunmi@yahoo.com

ABSTRACT

In this research work, an Automatic sliding door System using an infrared sensor was developed. It uses a sensor, a control unit & drive unit to open and close doors at the entrance of a public building. The primary aim of this research work is to learn in details about how the automatic door system works and to understand the concepts involved. The secondary aim is to fabricate a simple circuit model to show how the system works. The main activities involved in this work are the research done on how the automatic door works, sketching a detailed circuit & then fabricating a simple model.

Keywords: Door, Infrared, Sensor, Automatic, Construction, Sliding and Design.

1. INTRODUCTION

Sliding door is a type of door which opens horizontally by sliding, whereby the door is either mounted on or suspended from a track. Types of sliding doors include pocket doors, Arcadia doors, and bypass doors. Sliding doors are commonly shower doors, glass doors, screen doors, wardrobe and the system can also be done and implemented in the building of school, hall, auditorium, banks, shopping malls, various departmental buildings and they can be extremely useful in a wide variety of environments. Automation is the art of making processes or machines self-acting or self-moving, it also pertains to the technique of making a device, machine, process or procedure more fully automatic, it is a self-controlling or self-moving processes. Automation in the electrical, electronics and computing world has grown rapidly of which it dates back to 1940 when the first electronics computing machine was developed. This has aided humans as it basically reduces/eliminates human intervention, of which automatic sliding door also makes the list of automation in the electro-computing world(Alzar & Buhur, 2005; Horowitz & Hill, 1989)

An automatic door is an automated movable barrier installed at the entrance of a room, building or space to control and restrict access or provide privacy. Also an automatic door indicates a door that opens on its own as a moving object approaches it. It is an electro-mechanical door that has undergone the process of automation. The reason for making the sliding door automatic is to allow pedestrians to gain easy entrance in and out without having anyone to keep opening and closing the sliding door. (Giblasco, 1999(a & b)).

1.1 Research Objectives

The aim of this research work is to design and construct a simple model of an automatic sliding door and the objectives is to develop a simple model that can be transformed into a bigger project and also to understand the concepts involved in how an automatic sliding door works and to fabricate a simple model to show how the system works within the expected timeframe and with the available resources (Mith, 1980; Potamitis et al, 2003)

2. AUTOMATIC DOORS

Automatic doors are doors which open automatically when approached by someone, rather than needing to be opened manually with a door handle or bar. Automatic doors are powered open and closed, a door fitted with a spring to close it is not an automatic door. Automatic door is the application of advanced sensor technology, computer programmable control through the PLC and AC variable speed control system PLC control electromechanical actuators to open and close a door automatic door system. Automatic doors originated in the 20th century, 30 to 40 years, which was mainly used for military warehouse, an important plant for the fire, bullet-proof and easy to open the door.(David, 2005; Conte and Scaradozzi, 2003).

Designs for automatic doors vary. Some slide open, while others consist of panels which fold when people enter or exit, and others swing in or out like conventional doors. The doors are equipped with a motion sensor which can detect people when they approach, and the sensitivity of the sensor can be adjusted as needed. For people in wheelchairs and other disabled individuals, automatic doors are an immense boon, since conventional doors can be very hard to work with. It may be impossible to open a conventional door while seated in a wheelchair or navigating with crutches, for example, and for people with disabilities in their hands and arms, conventional doors can present a real obstacle. (Zungeru et al, 2012(a,b & c)). Automatic doors ensure disabled access into public facilities. These doors require electricity to operate, with electricity driving the motor which opens the doors. Many automatic doors have a manual override so that in the event of a power failure or a mechanical problem, the doors can still be opened. The doors are also designed to be sensitive to obstacles in the doorway, so that they will not close on someone or something which happens to be in the middle of the path of the doors. These safety measures ensure that automatic doors are safe in a variety of situations.(Webster and While, 1999).

3. METHODS FOR ACTIVATION:

There are three methods by which an automatic door is activated.

1. A sensor detects traffic is approaching. Sensors for automatic doors are generally:
   - A pressure sensor - e.g., a floor mat which reacts to the pressure of someone standing on it.
   - An infra-red curtain or beam which shines invisible light onto sensors; if someone or something blocks the beam the door will be open.
   - A motion sensor which uses low-power microwave radar for the same purpose.
   - An electronic sensor (e.g. based on infra red or radio waves) can be triggered by something that someone carries, or is installed inside a vehicle. These are popular for garage doors.
2. A switch is operated manually, perhaps after security checks. This can be a push button switch or a swipe card.
3. The user pushes, or pulls the door, once the door detects the movement it completes the open and close cycle. These are also known as power-assisted doors.

In addition to activation sensors, automatic doors are generally fitted with safety sensors. These are usually an infra-red curtain or beam, but can be a pressure mat fitted on the swing side of the door. The purpose of the safety sensor is to prevent the door from opening or slow its speed if an object is detected in its path whilst opening and to prevent the door closing or reactivate it if an object is detected in its path.

3.1 Types of automatic doors

There are different types of automatic doors these days.
i. Automatic swinging door.
ii. Automatic telescopic door.
iii. Revolving automatic door.
iv. Automatic parking barrier
v. Automatic balanced door.

i. Automatic Swinging Door

An automatic swing door have a variety of configurations, including a single door that swings in or out, is left-handed or right-handed, and a pair of doors that simultaneously swing in the same direction. The door operator is concealed or surface-applied. The doors are center-pivoted, offset hung, balanced or hinged. Automatic swinging doors also feature sensors or control mats and safety signage.

Fig.1 Automatic Swinging door

ii. Automatic Telescopic Door

Telescopic sliding doors have each of the leaves slide with a different speed sideways. Telescopic sliding doors are used for narrow openings, where unusually wide opening widths and small space requirement is necessary.

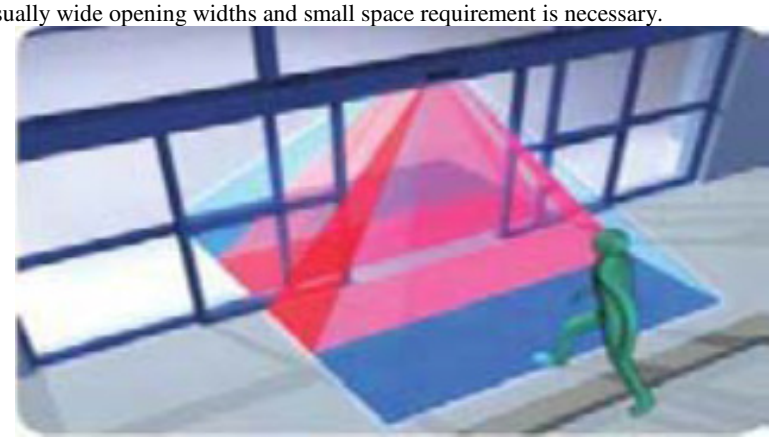

Fig. 2 Automatic telescopic door

iii. Revolving Automatic Door

The revolving automatic door is designed for everyday use, so is an ideal alternative for buildings with large number of visitors. Open or closed, the revolving door has another major advantage; no draught: the revolving door saves energy and ensures a uniform climate inside the building.

Fig. 3: Revolving automatic door

iv.Automatic parking barrier

An automatic parking barrier is used for reserving personal parking spaces or keeping unauthorized vehicles from office parking areas. It's operated by remote control from the safety and comfort of a vehicle.

Fig. 4: Automatic parking barrier

v. Automatic Balanced Door

The balanced door has incorporated the advantages of both conventional swing doors and normal sliding doors. Constraints of safety and reliability with many door installations often lead to the balanced door being the only natural solution. Wherever there is only minimal space for a door leaf that swings open, there is no other alternative than the balanced door.

Fig. 5: Automatic balance door

4. BENEFITS OF AUTOMATIC SLIDING DOORS

Savings

Automatic doors conserve energy. They save energy from heating and air-conditioning that would have been required otherwise. Given that they open only when passing-by traffic is near, and close spontaneously, automatic doors will easily conserve temperature inside your premises. Thus, effectively reduces wasted energy in multiple ways and may significantly lessen annual heating and cooling costs, saving-up on electricity costs.

Accessibility

Today's technologically sophisticated automatic sliding doors are user-friendly and virtually self-sufficient. It provides disabled and aged people easy access, since they are not obliged to open or close the door by themselves.

Control

Security personnel can remotely control automatic doors. They can grant access to selective traffic or deactivate it, had there been children trying to access the premises.

Security and Transparency

Although glass is regarded fragile and brittle, the automatic sliding glass doors are made of toughened material which is almost five times stronger than normal safety glass doors. Automatic sliding doors are not just transparent but secure as well.

Convenient For Larger Merchandize

An automatic sliding door does away with the aggravation and struggle associated with opening a heavy, manual door and instantly demonstrates to users the house/establishment they are entering cares about their convenience. Automatic sliding doors are quite large, generally twice as large as the standard entry doors. They allow not only the incoming user for the establishment,

but also enable users to take out big size purchases such as hutches, huts, Christmas trees, furniture items such as couches, beds and many other similar sized things.

They Invite People To Step In
The constantly opening of sliding doors in an establishment allows a glimpse to the passers-by giving them an incentive to drop in and check out the offerings. Sometimes those waiting around tend to come in just to while away the time going around the store. Sliding doors offer welcome to visitors compared with the shut conventional doors that need to be pushed apart to enter the properties.

Easy To Own, Use and Maintain
Automatic sliding doors are manufactured according to the highest standards for quality and
safety, ensuring minimal maintenance requirements and making them incredibly easy to own, use and maintain.

Safety
With over 50 billion safe automatic door openings and closings every year in the United States alone, automatic doors hold an exceptional safety record, consistently providing safe, convenient access for everyone.

5. THE MAIN DISADVANTAGES OF AUTOMATION ARE

- Technology limits. Current technology is unable to automate all the desired tasks.
- Unpredictable development costs. The research and development cost of automating a process is difficult to predict accurately beforehand. Since this cost can have a large impact on profitability, it is possible to finish automating a process only to discover that there is no economic advantage in doing so extending conventionally to 300 micrometers. Infrared radiation or light is an invisible electromagnetic radiation that has a longer wavelength than visible light and is detected most often by its heating effect.
- Initial costs are relatively high: The automation of a new product required a huge initial investment in comparison with the unit cost of the product, although the cost of automation is spread in many product batches. The automation of a plant required a great initial investment too, although this cost is spread in the products to be produced.

6. PRINCIPLE OF OPERATION

The design of automatic slide door using infrared sensor operates once the sensor under transmission is been broken without touching anything or the door or switch to slide the door open and close. Once traffic approaches the door, the infrared sensor placed in opposition direction breaks and the door opens for some 15 seconds allowing one to pass through the door and closes back after 15 seconds, the door is designed with a bi-directional electro-mechanical motor, which has a forward and reverse operation to meet the economic importance.

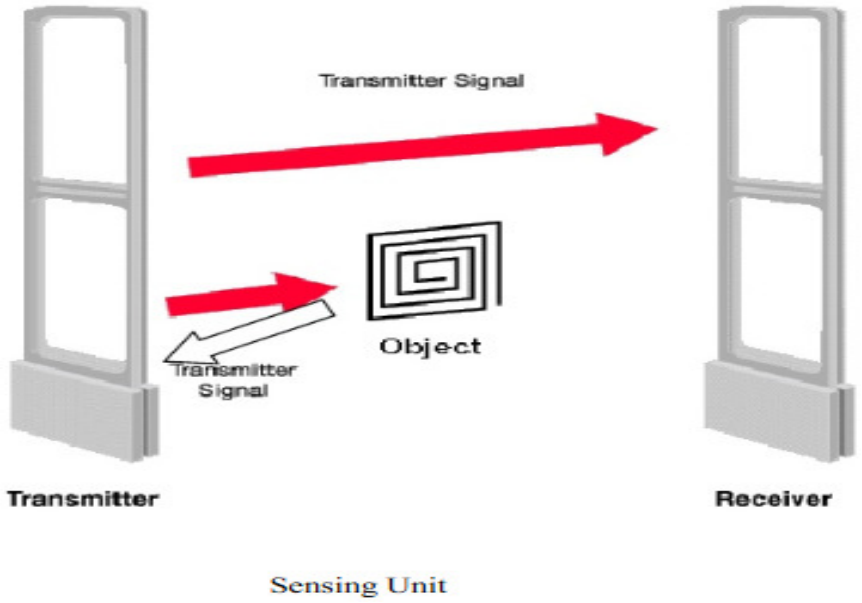

Fig 6: Sensing unit

Generalized Block Diagram

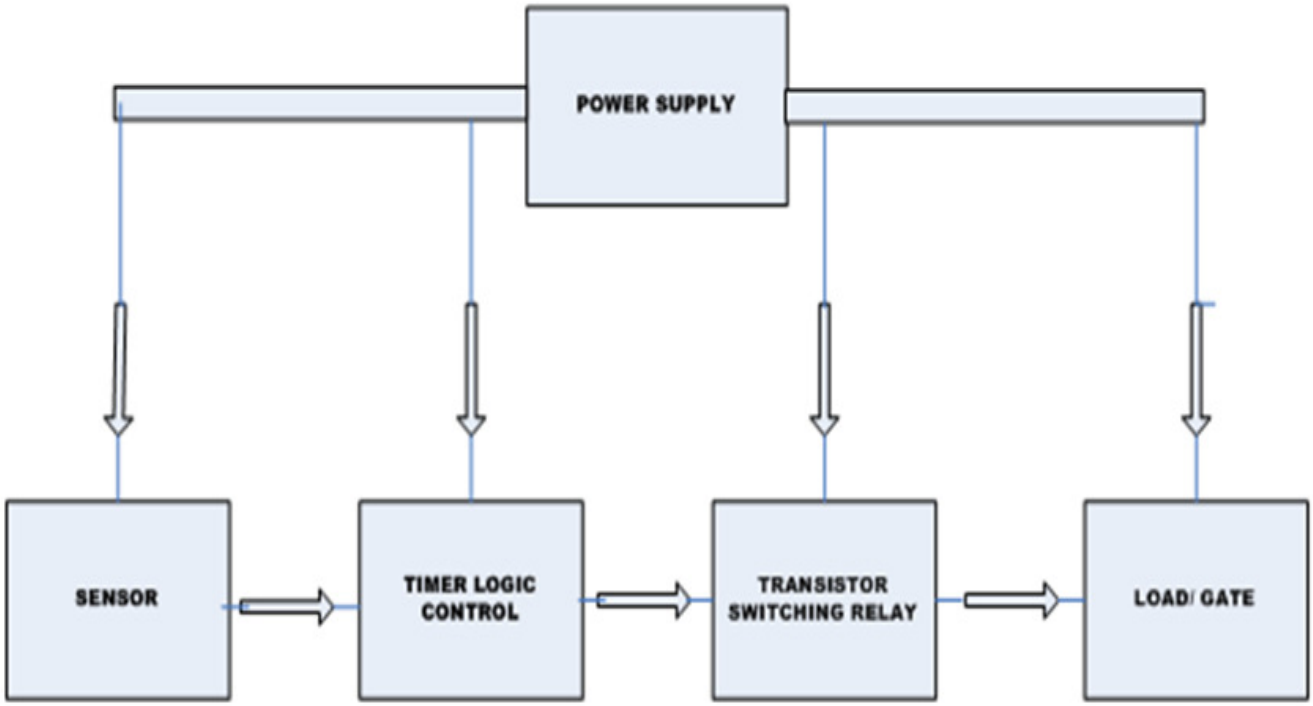

Fig. 7 : Operation

Ultrasonic Sensors

Fig 8(a). Transmitting waves to Object

Fig 8(b). Receiving waves after Reflection

An ultrasonic sensor utilizes a transducer that produces an electrical output in response to received ultrasonic energy. An ultrasonic sensor is used as an obstacle detection sensor for detecting obstacle by transmitting and receiving an ultrasonic wave. A typical ultrasonic sensor is designed to emit an ultrasonic pulse toward an object to be detected to receive a reflected wave, which is reflected on the object, to measure a period of time from the ultrasonic pulse emitting time to the reflected wave receiving time to detect the object. An ultrasonic sensor comprises at least one ultrasonic transducer which transforms electrical energy into sound and, in reverse, sound into electrical energy. The ultrasonic sensor has a piezoelectric vibrator; the piezoelectric vibrator vibrates to transmit an ultrasonic wave and receives a reflected wave from an obstacle, so that an obstacle can be detected.

Infrared Transmitter

Essentially, an infrared transmitter is an electronic device that generates infrared light (light with a wavelength of 1mm and 750nanometer), which is invisible to the human eyes. An infrared transmitter is simply a Light Emitting Diode, which emits invisible IR light, and some associated circuitry. In an infrared remote control, for example, pushing a button sends an electric signal to the LED, which converts the signal into a beam of infrared light. The receiving device detects the light with a photo diode and converts it to an electrical signal which, via an integrated circuit, controls its actions.

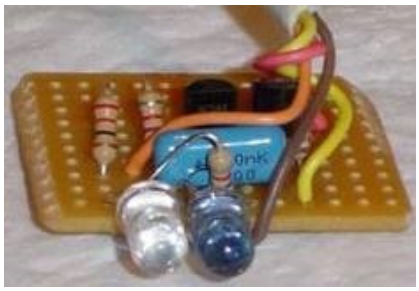

Fig. 9: Circuit of a typical infrared transmitter

Infrared Receiver

The infrared receiver receives the infrared signals transmitted from the infrared LED. The signal is transfer through the space, although during the process of transmission, the infrared signal is mixed with the unwanted signals in the space, thereby causing attenuation of the transmitted signal which is amplified by the operational amplifier in the circuit.

Fig. 10: Infrared receiver

Voltage Comparator

An operational amplifier is a differential amplifier with an extremely high open voltage gain. Negative feedback circuits are employed in op-amps to control the gain when precise gain values are needed. The comparator is an operational amplifier without a feedback. Hence, it is controlled by the pen loop voltage gain.

The op-amp was originally developed for use with analog computers but now they found place in almost all aspect of electronics. The op-amp has the following ideal characteristics;

i. Infinite voltage gain.
ii. Infinite input impedance.
iii. Infinite bandwidth.

In practice however there are deviations from ideal conditions due to manufacturing processes and other physical conditions the various components might be subjected to which make up the op-amps. The voltage gain and bandwidth are two parameters that are very essential. For successful application of this device, more information about the parameters can be gotten from IC data sheets. Other op-amp circuits include, inverting and non – inverters amplifiers, summing amplifiers, unity gain buffers etc.

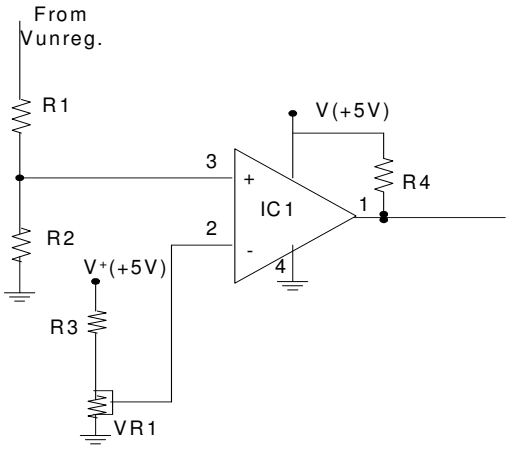

Fig. 11: A comparator stage

The Monostable Stage
The one-shot monostable is triggered from the output of the op-amp difference amplifier circuit. When there is a surge voltage the difference amplifier voltage drops below 1/3vcc and the monostable is triggered.

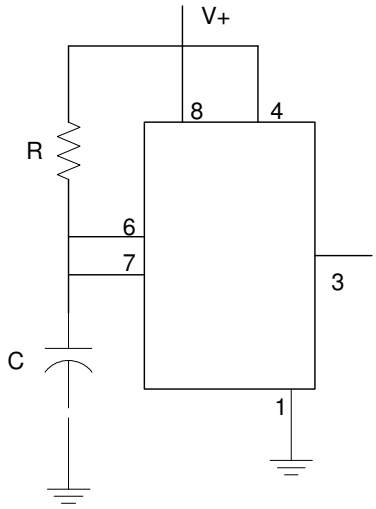

Fig. 12: One-shot monostable

Transistor Switching Circuit
The switching transistor switches the relay, which cuts-off power to the load when there is a phase surge problem. The transistor as a switch operates in class A mode. The relay is switched on when the flip-flop is in SET mode. A base resistor is required to ensure perfect switching of the transistor in saturation. Diode protects the transistor from back emf that might be generated since the relay coil presents an inductive load.

Voltage Regulator
Voltage regulator is also called linear regulator and it exist in two basic forms:

- Series regulators: Is the more common form. The series regulator works by providing a path from the supply voltage to the load through a variable resistance (the main transistor is in the "top half" of the voltage divider). The power dissipated by the regulating device is equal to the power supply output current times the voltage drops in the regulating device.
- The shunt regulator: it works by providing a path from the supply voltage to ground through a variable resistance (the main transistor is in the "bottom half" of the voltage divider). The current through the shunt regulator is diverted away from the load and flows uselessly to ground, making this form even less efficient than the series regulator. It is, however, simpler, sometimes consisting of just a voltage-reference diode, and is used in very low-powered circuits where the wasted current is too small to be of concern.

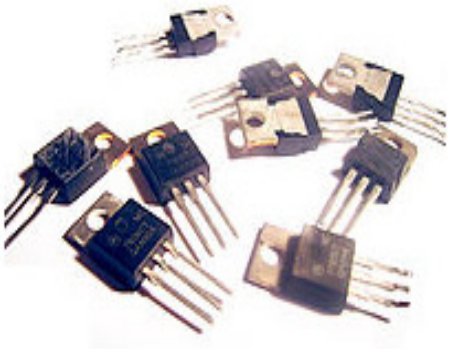

Fig. 12: Different types of voltage regulator

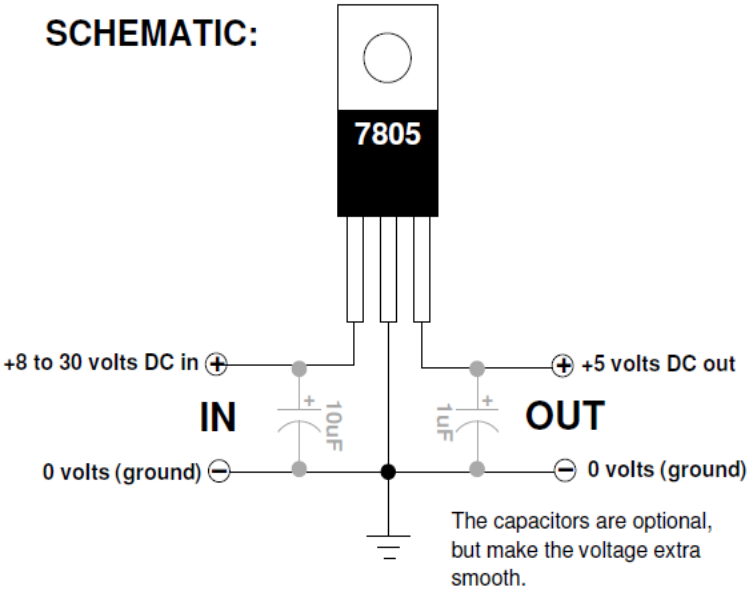

Fig. 13: Schematics

Voltage regulator

All linear regulators require an input voltage at least some minimum amount higher than the desired output voltage. That minimum amount is called the dropout voltage. For example, a common regulator such as the 7805 has an output voltage of 5V, but can only maintain this if the input voltage remains above about 7V. The 7805 is a voltage regulator that looks like a transistor but it is actually an integrated circuit with three legs. It can take a higher, crappy D.C voltage and turn it into a nice, smooth 5 volts D.C. To achieve this, a minimum of 8 volts to a maximum of 30 volts will be needed. It can handle around .5 to .75 amps, but it gets hot and so a heat-sink will be needed to dissipate heat.

Bread Board

A breadboard is used to build and test circuits quickly before finalizing any circuit design. The breadboard has many holes into which circuit components like ICs and resistors can be inserted. A typical breadboard is shown below:

Fig. 14: A bread board

Dc Motor

The motor works in bidirectional. The motor works in one direction when you feed it with DC voltage. Reversing the dc supply voltage polarity will make it run in a reverse direction.

Fig. 15: A DC motor

LED
LEDs are used as indicator lamps in many devices. The LED is based on the semiconductor diode. When a diode is forward biased (switched on), electrons are able to recombine with holes within the device, releasing energy in the form of photons.

Fig. 16: LED

Wire
A short length of wire is used to make a connection, usually temporarily, between terminals or to bypass a component. It is also use connect components on the motherboard and to connect it to the main power supply unit.

Fig. 17: Jumper cable

Comprehensive Circuit Diagram

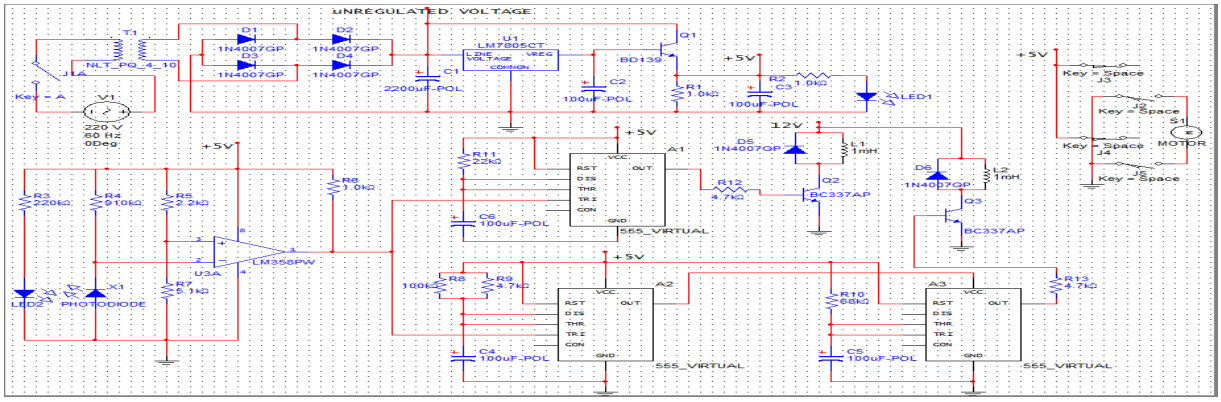

Fig. 18: Comprehensive Circuit Diagram

7. CONSTRUCTION AND TESTING

The construction and testing stage of any project is an essential period that requires serious accuracy. This research work was done in different stages, from circuit design, to bread-board connection, to placement on vero-board, then to soldering, constructing the model and then to testing and results. The circuit design has already been discussed in chapter three of this report. In summary, this chapter deals with the following stages:

- Breadboard connection.
- Soldering of circuit on vero-board.
- Testing and Result.
- Coupling of the entire project to the casing and to a model.

7.1 Construction

Circuit Construction
The components were first connected on the bread board (since no soldering is required on the bread board), it is easy to change connections and replace the components used. By virtue of first placing the components on breadboard, the components will not be damaged so they will be available for reuse, to test how well the components will function as a unit and to transfer the connection to a vero board for permanent connection.

The power supply stage was first soldered, then the transmitter and receiver stage. The IC 555 timer sockets were mounted and soldered. Special attention was paid to the pin connection. The contacts of the relay were then connected externally. The input unit was connected externally from the control, output and power supply units with the wires connecting the switches properly soldered in position. Also, attention was paid to the polarity of the bridge rectifier and the capacitors. The power supply was tested on no- load using a 240V AC supply as all the other stages were soldered. Each stage was tested using the multi-meter to make sure it is working properly before the next stage is done. This helps to detect mistakes and faults easily. The soldering of the circuit was done on a 10cm by 24cm Vero-board.

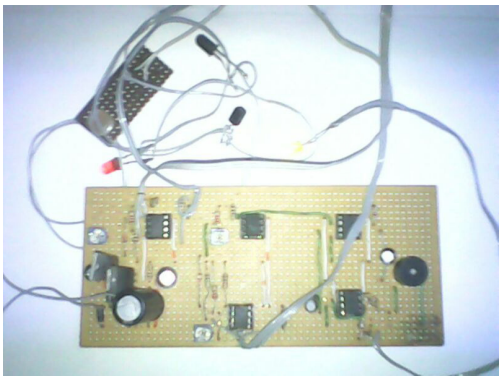

Fig. 19: Components arrangement on the various vero-boards

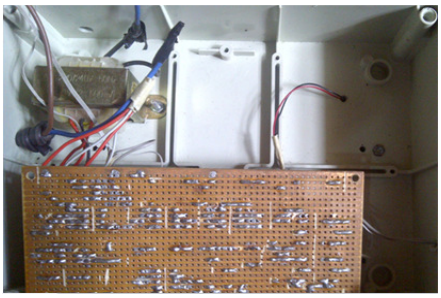

Fig. 20: Soldering of components

7.2 Construction of Physical Model

A model of an automatic slide door was made using plywood. The scale is of ratio1:10 and this was chosen to make the model look close to reality, for mobility sake and base on the material used for the opening system in this project. The length is 4.5m, height 2.4m and the width is 2.5m. The materials used in joining the plywood are top-bond, glue, tack nail and pieces of woods. The roof is made of fibre glass perspex.

Fig. 21: View of components of the roof and a picture of me during cutting of the model parts

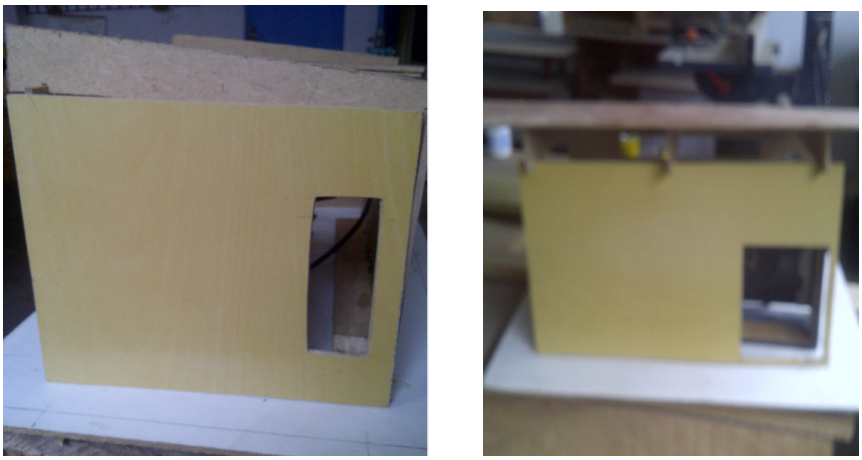

Fig. 22: Side view and front view of the model during construction

7.3 Packaging

This system was cased in a ceramic plastic industrial panel box and a wooden model, this makes the system look attractive, and it helps in marketing the project because the circuit has to be attractive before someone would want to know what it does. The circuit board was laid out on the floor of the box with the transformer mounted beside it, while that of the input had the circuit board carrying the switches glued to the casing. The casing has special perforation to ensure the system is not overheating, and this will aid the life span of the circuit.

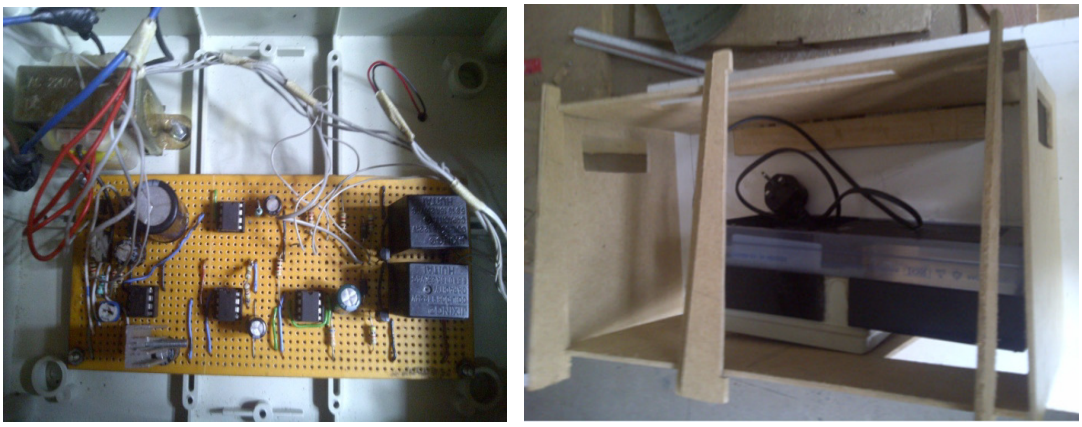

Fig. 23: Components inside a box cover and the top view of the model

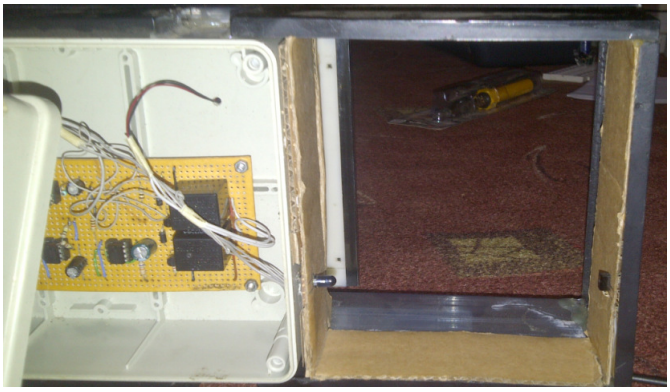

Fig. 24: View of when the Automatic Slide door was open.

Testing

The physical realization of the system is very vital. This is where the fantasy of the whole idea meets reality. After carrying out all the paper design and analysis, the project was implemented and tested to ensure its working ability, and was finally constructed to meet desired specifications. The process of testing and implementation involved the use of some equipment's such as digital multi-meter and signal generators. The digital multi-meter basically measure voltages, resistance, continuity, current and transistor hFE. The digital multi-meter was used to check the various voltage drops at all stages in the system, and most importantly the infra-red receiver stage, to help check the references in the comparator circuit. Also the digital multi-meter was used for troubleshooting the soldering and coupling. The project was tested using AC (alternating current) power supply; the 7805 voltage regulator is used to regulate this voltage to the 5 volts needed by the circuit to operate. At a close distance, when the infrared senses traffic approaching (through the space in between the infrared and the receiver), the signal been sent to the receiver is broken thereby causing the automate slide door to picks the signal and therefore open for 15 seconds and thereafter closes after 15 seconds.

Fig. 25: Front view and back view of an Automatic Slide Door model

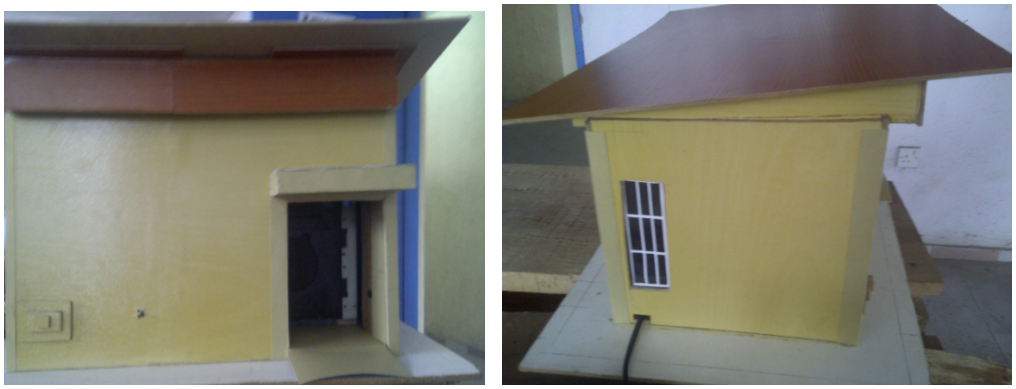

Fig. 26: Front view and side view of an Automatic Slide Door model

8. CONCLUSION

This system which is the design and construction of an automatic sliding door using infrared sensor was designed considering some factors such as economy, availability of components and research materials, efficiency, compatibility, portability and also durability. The performance of the system after test met design specifications. The general operation of this system and performance is dependent on the presence of the person entering through the door and how closer he/she is to the door. The door is meant to open automatically but in a case where there is no power supply trying to force the door open will damage the mechanical control system of the unit. Also the operation is dependent on how well the soldering is done, and the positioning of the components on the Vero-board. The IC's were soldered away from the power supply stage to prevent heat radiation which, might occur and affect the performance of the entire system. The construction was done in such a way that it makes maintenance and repairs an easy task and affordable for the user should there be any system breakdown. All components were soldered on one Vero-board which makes troubleshooting easier.

REFERENCES

1. Alkar, A. Z., & Buhur, U. (2005), ***An Internet Based Wireless Home Automation System for Multifunctional Devices*****,** IEEE Consumer Electronics, 51(4), pp. 1169-1174.
2. Conte, G., & Scaradozzi, D. (2003), ***Viewing home automation systems as multiple agents systems*****,** RoboCUP2003, Padova, Italy.
3. David Bodanis (2005). ***Electric Universe,*** Crown Publishers, New York. ISBN 0-7394-5670-9.
4. Dorf, R. (1997), ***Electrical Engineering Handbook*****,** 2nd edition, Boca Raton, Fla.: CRC.
5. Gibilisco, S. (1999), ***Electronics Portable Handbook*****,** New York: McGraw-Hill.
6. Gibilisco, S. (1999), ***Electronics Formulas Pocket Reference,*** New York: McGraw-Hill.
7. Grant McFarland, ***Microprocessor design: a practical guide from design planning to manufacturing p.10,*** McGraw-Hill Professional, 2006 ISBN 0-07-145951-0.
8. Horowitz, Paul; Winfield Hill (1989). ***The Art of Electronics,*** 2nd edition, Cambridge University Press. p. 115. ISBN 0-521-37095-7.
9. Potamitis, I., Georgila, K., Fakotakis, N., & Kokkinakis, G. (2003), "***An integrated system for smart-home control of appliances based on remote speech interaction***", EUROSPEECH 2003,
10. 8th European Conference on Speech Communication and Technology, Geneva, Switzerland, Sept. 1-4, 2003, pp. 2197-2200.
11. Smith, R. J. (1980), ***Electronics: Circuits and Devices,*** 2nd edition. New York: John Wiley & Sons, Inc.
12. Webster, J. G., Wile (1999) ***Encyclopedia of Electrical and Electronics Engineering*****,** vol 4. New York: John Wiley & Sons, Inc.
13. Zungeru, A.M. et al., (2012). ***Design and Implementation of a Low Cost Digital Bus Passenger Counter. Innovative Systems Design and Engineering,*** pg. 29–41.
14. Zungeru, A.M., Edu, U., & Garba, A. (2012). ***Design and Implementation of a Short Message Service, Based Remote Controller, Computer Engineering and Intelligent systems***, pg.106–118.
15. Zungeru, A..M., Kolo, J.G., & Olumide, I. (2012c), ***A Simple and Reliable Touch sensitive security System,*** International Journal of Network Security & Its Applications (IJNSA), 4(5), pg. 149–165.
16. "Transistor Example". **http://www.bcae1.com/transres.htm. 071003 bcae1.com** http**://books.google.com/?id=q7UzNoWdGAkC&pg=PA42&dq=transistor+inventions-of-the-twentieth-century.**
17. http**://www.robosiri.it/ROBOCUP_2003/ROBOCUP-SITOSIRI/articles/pdf/Conte.pdf**
18. http**://nd.edu/~manufact/MPEM%20pdf_files/Ch14.pdf.**

Authors' Brief

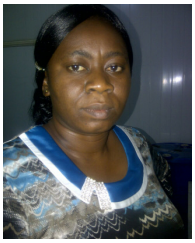

Oladumoye O.M. is a lecturer at the Department of Computer & Information Science, Lead City University, Ibadan. She has Bsc and Masters degrees from Obafemi Awolowo University, Ile-Ife, Nigeria and is currently rounding up her Phd program at the University of Ibadan. She can be reached at kenbolaji@yahoo.com or on phone through +2348037153315

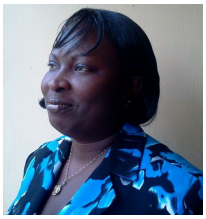

Oluwatomi Adenike A. (Mrs) lectures at the Department of Computer with Electronics, Lead City University, Ibadan, Nigeria. She holds Bachelor's degree in Electrical Engineering from Ladoke Akintola University of Technology, Ogbomosho, Oyo, Nigeria and Master's degree in Electrical and Electronics Engineering from Obafemi Awolowo University, Ile-Ife Nigeria. Her research focuses on communication. She can be reached at oluwatomiadenike@gmail.com or on phone through +2348036051008.